rev:	revision text:	rev.date:	rev.by:	aprv. date:	aprv. by:
01	improved cutline	2023-04-27	MicNaeb	2023-04-27	KaiPeik
02	general improvements	2023-04-27	MicNaeb	2023-04-28	KaiPeik
03	improved cutline	2023-07-18	MicNaeb	2023-07-18	RaiSeid
04	general simplification	2023-12-20	KaiGünd	2023-12-20	MicNaeb

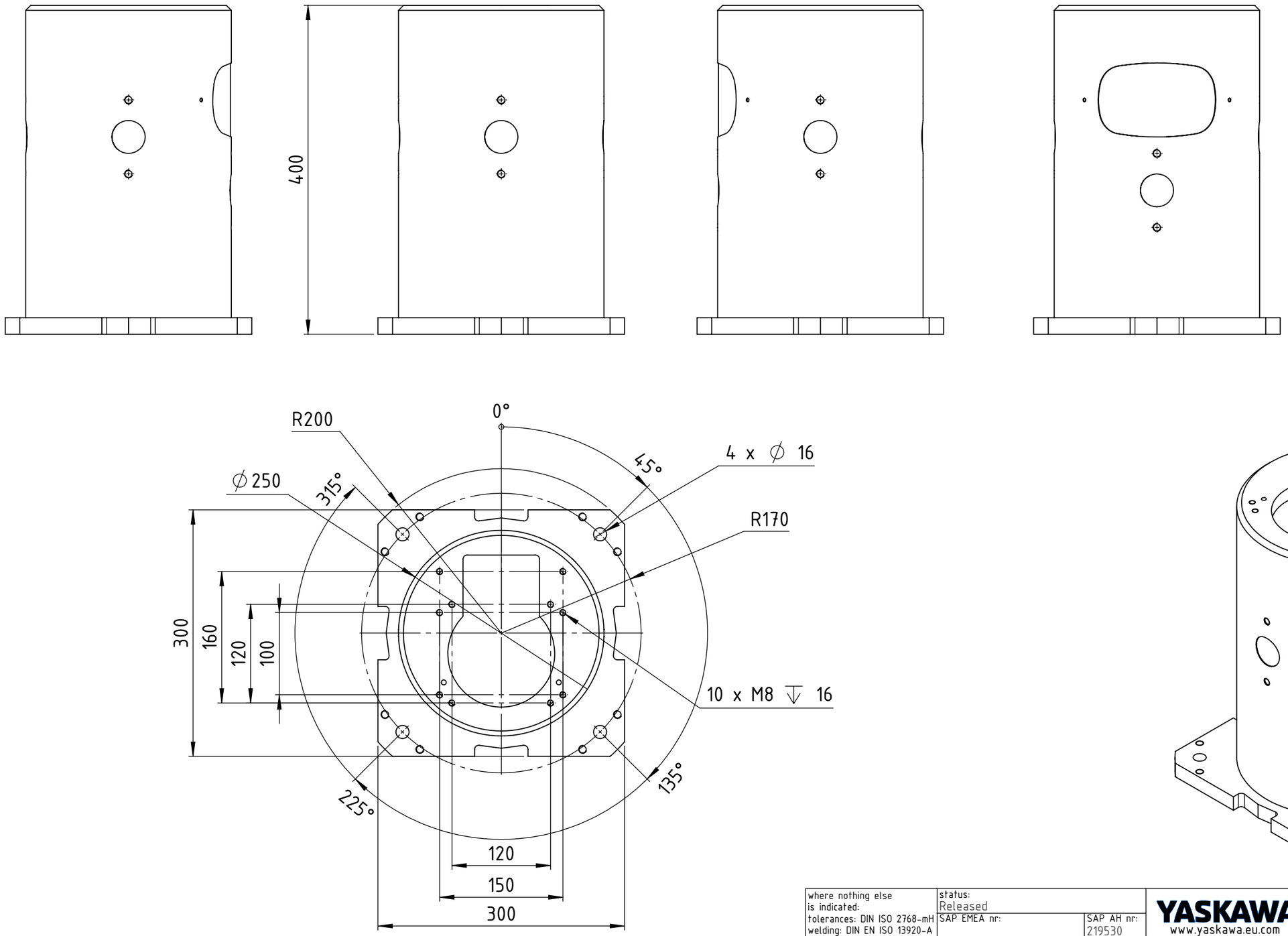

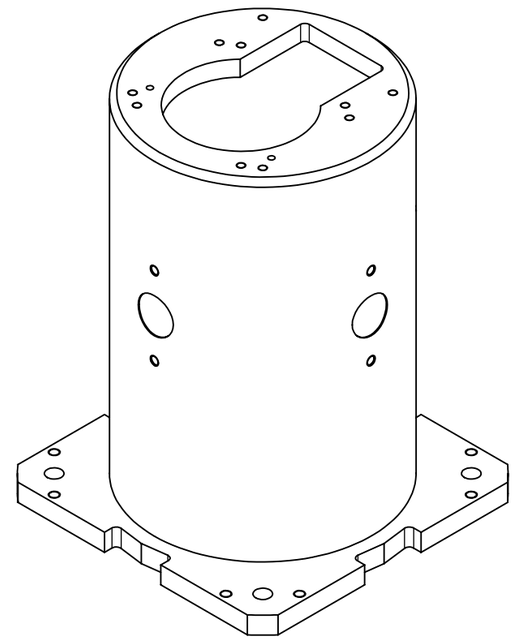

where nothing else is indicated:
tolerances: DIN ISO 2768-mH
welding: DIN EN ISO 13920-A
edges: DIN EN ISO 13715
-0,3
-0,5
+0,3

status: Released
SAP EMEA nr:
SAP AH nr: 219530
title / description: robot stand A-400

YASKAWA
www.yaskawa.eu.com

dimension:		weight: 18,087 kg	
created:	2021-07-29	MicNaeb	
drawn:	2021-07-29	MicNaeb	sheet: A3
approved:			
drawing-nr.: 0000107778-100		revision: 04	1:5 4/5

CONFIDENTIAL! The reproduction, distribution and utilization of this document as well as the communication of its contents to others without express authorization is prohibited. Offenders will be held liable for the payment of damages. All rights reserved in the event of the grant of a patent, utility model or design